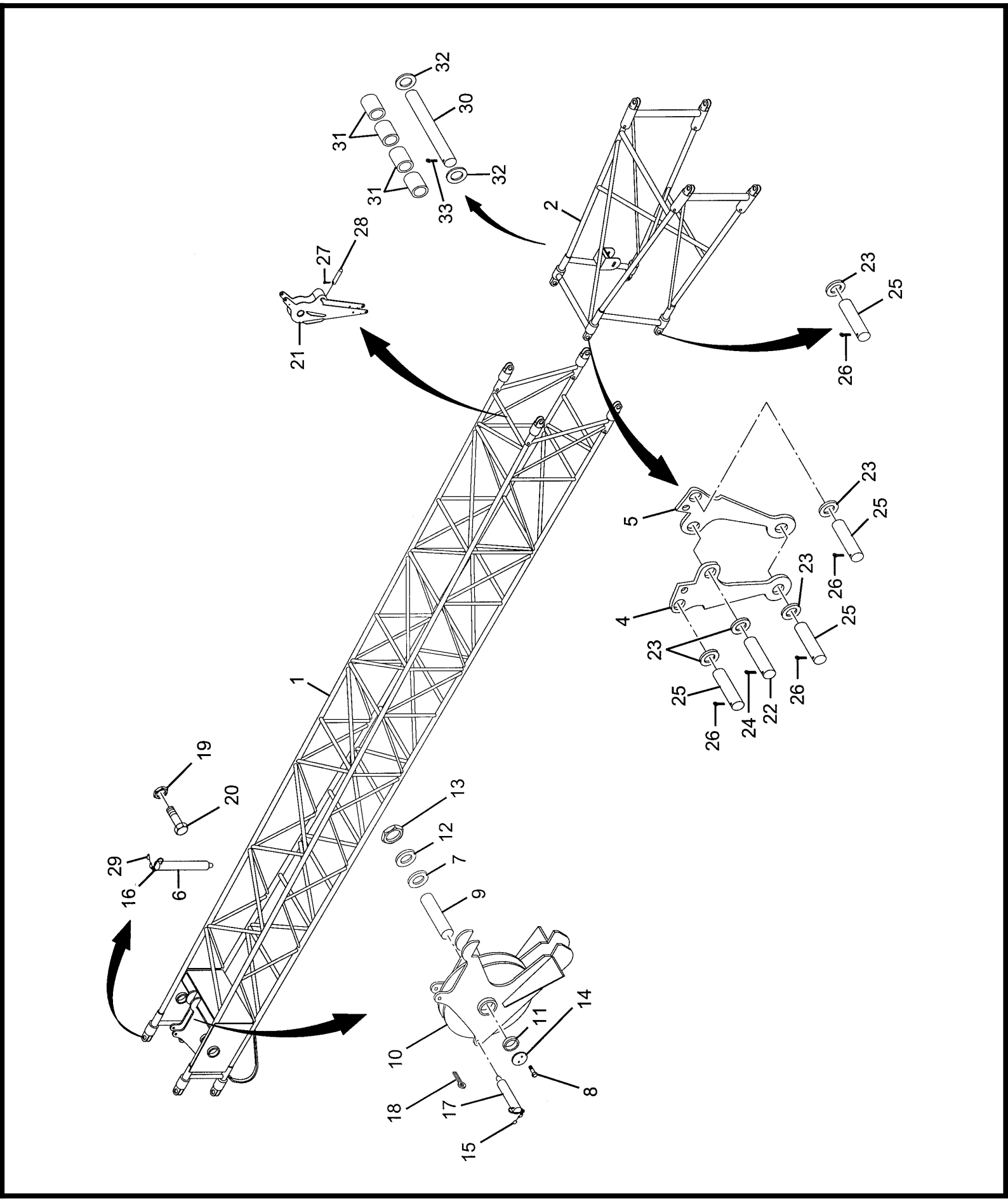

2174910091

(SHEET 2 OF 2)

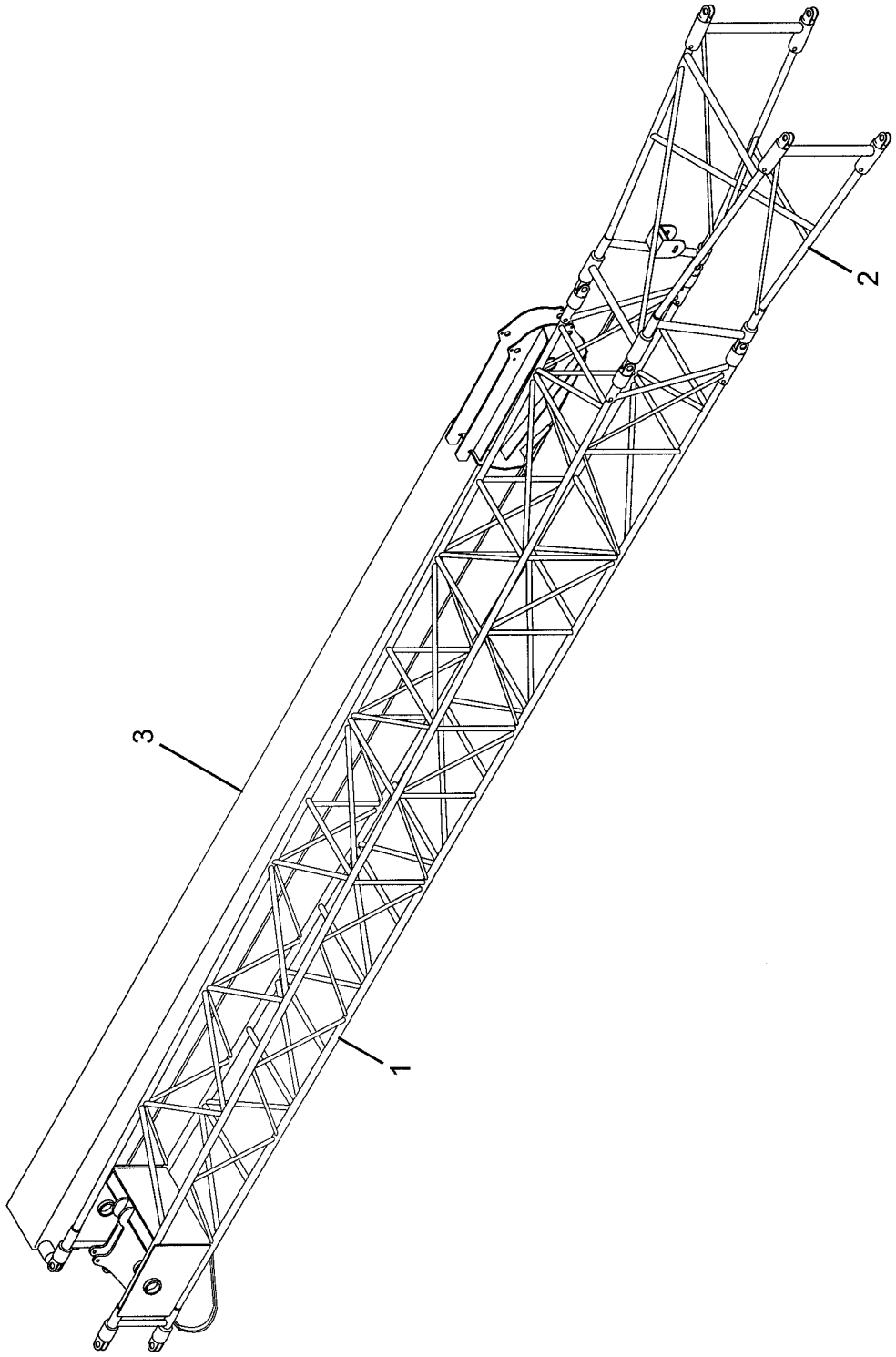

2174910091

(SHEET 1 OF 2)